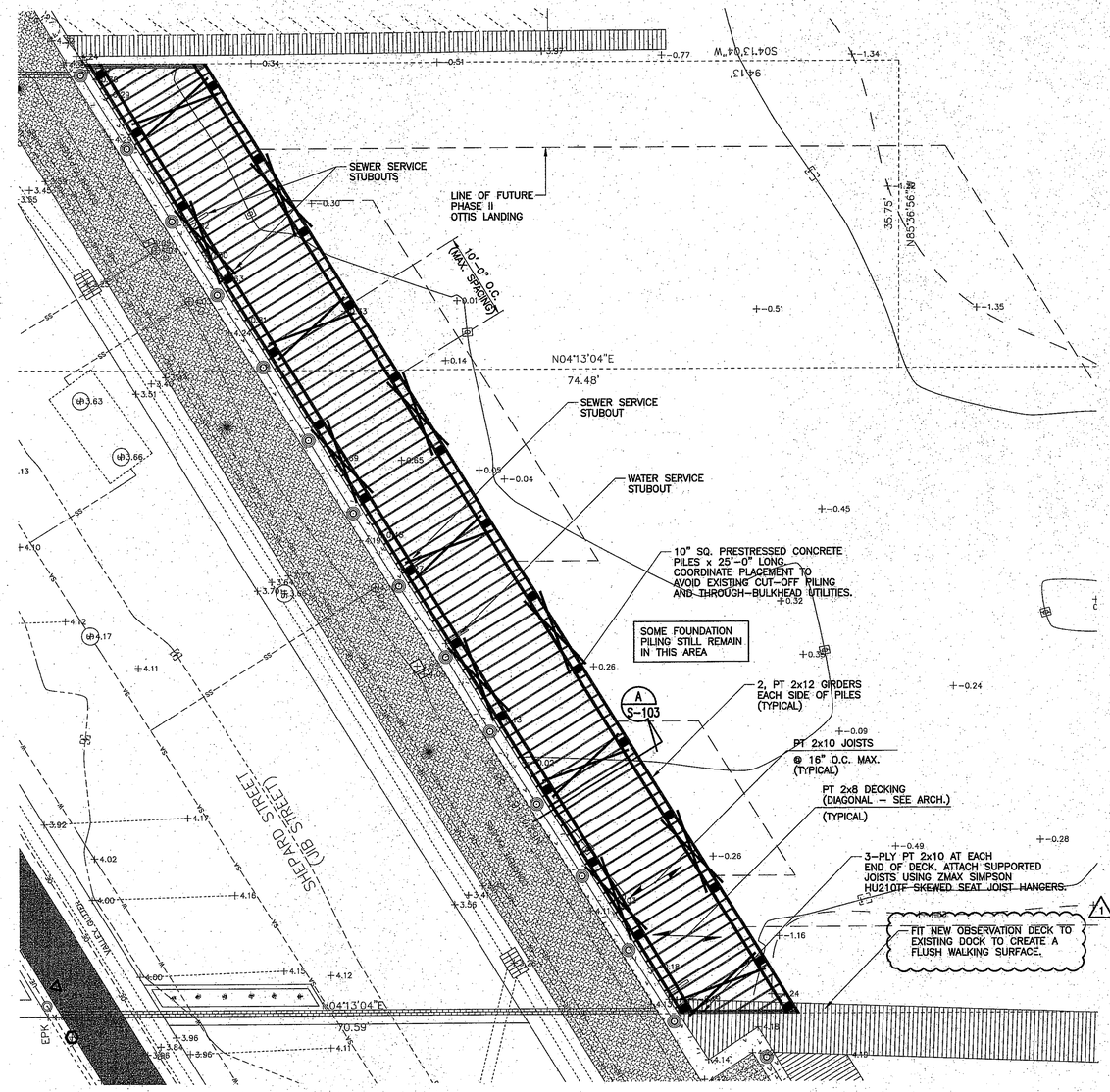

PHASE I JIB PLAZA
OBSERVATION DECK FRAMING PLAN

N

1/8" = 1'-0"

NOTES:

1. SURVEY INFORMATION PROVIDED BY MCDAVID ASSOCIATES, INC., DATED NOVEMBER 1, 2012.
2. — PT 2x10 X-BRACING. 4 PAIRS OF X-BRACING REQUIRED IN DECK LONG DIRECTION AND 5 SETS REQUIRED IN DECK SHORT DIRECTION.

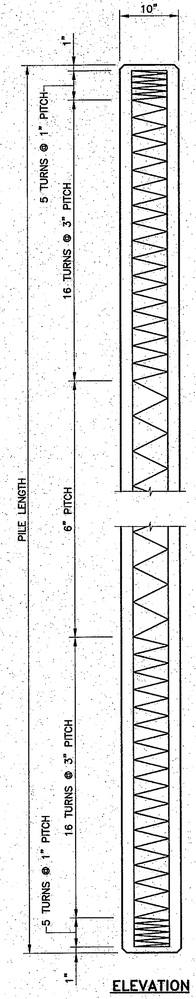

ELEVATION

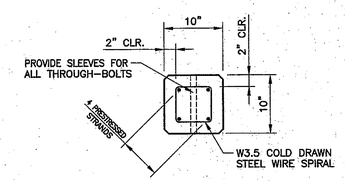

TYPICAL PLAN

10" PRESTRESSED CONCRETE PILE DETAIL (1 / S-103)

1" = 1'-0"

NOTES:

CONCRETE DESIGN DATA: f'c = 6,000 PSI w/ CORROSION INHIBITOR ADMIXTURE FOR SALT WATER IMMERSION.

IMPACT IN HANDLING = 50%

THE TRANSFER OF LOAD FROM THE ANCHORAGES TO THE PILE SHALL BE DONE WHEN THE CONCRETE HAS REACHED A COMPRESSIVE STRENGTH OF NOT LESS THAN 3,500 PSI.

IN INSTALLING THE PILES, A METHOD APPROVED BY THE ENGINEER SHALL BE USED, WHEREBY THE HEAD OF THE PILE IS NOT DAMAGED.

DEVICES FOR LIFTING PILES SHALL BE APPROVED BY THE ENGINEER. LOOPS OF STRANDS CAST IN THE PILES WILL NOT BE PERMITTED. INSERTS, CAST IN THE PILES TO RECEIVE THREADED EYE-BOLTS OR SIMILIAR APPROVED DEVICES, MAY BE USED: OR WHERE IT IS PRACTICABLE, SATISFACTORY CLAMPS OR SLINGS MAY BE USED. WHERE INSERTS ARE CAST IN THE PILES, THE OPENINGS SHALL BE REPAIRED AFTER THE EYE-BOLTS OR OTHER ATTACHMENTS HAVE BEEN REMOVED. THE OPENINGS SHALL BE REPAIRED IN A SATISFACTORY MANNER IN ORDER TO OBTAIN A UNIFORM APPEARANCE.

ALL PRESTRESSING STRANDS SHALL BE 7-WIRE STRESS RELIEVED OR LOW RELAXATION GRADE 270 STRANDS AND SHALL CONFORM TO ASTM A-416 EXCEPT FOR SAMPLING REQUIREMENTS WHICH SHALL BE IN ACCORDANCE WITH STANDARD SPECIFICATIONS.

THE CONTRACTOR MAY, AT HIS OPTION, USE EITHER OF THE THREE TYPES OF STRAND LISTED BELOW:

SIZE	GRADE	NUMBER OF STRANDS	AREA	ULTIMATE STRENGTH	APPLIED PRE-STRESS FORCE
7/16"	270 S.R.	6	0.115	31,000 # PER STRAND	21,700 # PER STRAND
1/2"	270 S.R.	5	0.153	41,300 # PER STRAND	28,900 # PER STRAND
1/2"	270 S.L.	4	0.153	41,300 # PER STRAND	30,980# PER STRAND

THE SLIP-FORM METHOD OF CASTING PILES WILL NOT BE PERMITTED

IF STRAND STRESS IS RELIEVED BY BURNING, THE STRANDS SHALL BE BURNED IN PAIRS, EXCEPT WHERE 5 STRANDS ARE USED THE LAST STRAND MAY BE BURNED SINGLY, ACCORDING TO BURNING PATTERNS SHOWN. NOT MORE THAN 4 STRANDS MAY BE BURNED AT ANY ONE SECTION BEFORE THE SAME STRANDS ARE BURNED AT BOTH ENDS OF THE BED AND BETWEEN EACH PAIR OF PILES IN THE BED.

BUILD-UPS SHALL BE "CLASS A" CONCRETE WITH 20% ADDITIONAL CEMENT. NO DRIVING OF THE BUILD-UP PILE WILL BE PERMITTED UNTIL THE CONCRETE HAS REACHED A COMPRESSIVE STRENGTH OF 3,000 PSI AND UNTIL A PERIOD OF SEVEN DAYS HAS ELAPSED SINCE CASTING OF THE BUILD-UP.

ALL CORNERS TO BE CHAMFERED 3/4"

WHERE CAST-IN-PLACE LIFTING DEVICES ARE NOT USED, PICK-UP POINTS TO BE INDICATED WITH A BLACK MARK 2" WIDE.

NOTE: PROVIDE CAST IN PLACE SLEEVES FOR ALL THROUGH-BOLTS.

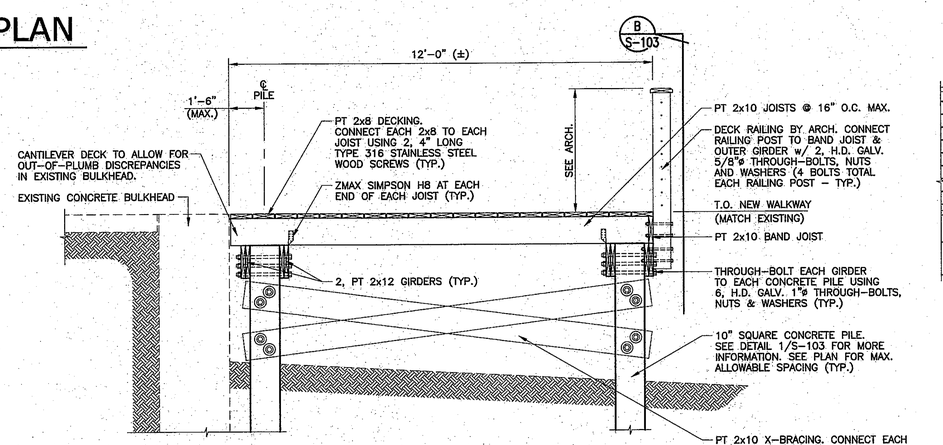

SECTION (A / S-103)

1/2" = 1'-0"

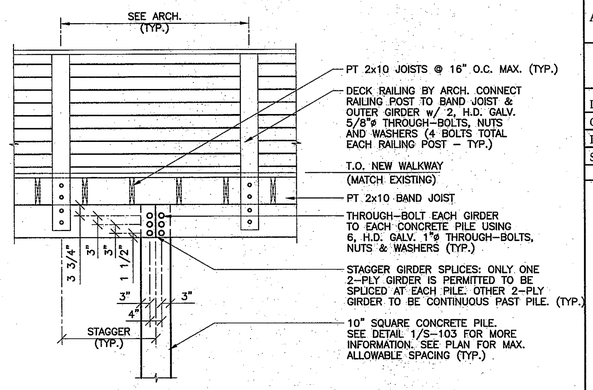

SECTION (B / S-103)

1/2" = 1'-0"

MK CHALK ARCHITECTURE, PA
P.O. Box 622
Morehead City, NC 28557

CONSULTANTS:

BURNETTE ARCHITECTURE & PLANNING
ASSOCIATE ARCHITECT

MEP ENGINEERING
STROUD ENGINEERING
L. MICHAEL STROUD, P.E.
GREENVILLE, NC &
MOREHEAD CITY, NC

ENGINEERING CONSULTANT
W.F. PARKER, P.E.
CAPE CARTARET, NC

MARINE STRUCTURAL & STRUCTURAL ENGINEERING
ANDREW CONSULTING ENGINEERS
JOHN "RODY" ANDREW, P.E.
NEAL W. ANDREW, P.E.
WILMINGTON, NC

CIVIL ENGINEERING & SURVEYING
McDAVID ASSOCIATES
TYNDALL LEWIS, P.E.
GOLDSBORO, NC

SEAL:

NORTH CAROLINA PROFESSIONAL SEAL 23591 ENGINEER NEAL W. ANDREW 06/17/13

REVISIONS:

1	MODIFIED NOTE	06-17-13

"JIB" PROPERTY WATERFRONT AMENITY
Morehead City, NC 28557

APPROVED BY OWNER DATE

APPROVED BY OWNER DATE

DATE: 12 DECEMBER 2012
CHECK BY: NWA
DRAWN BY: JMR & RDW
SCALE: AS NOTED

PHASE 1 OBSERVATION DECK FRAMING PLAN, SECTION & DETAILS

S-103-R1