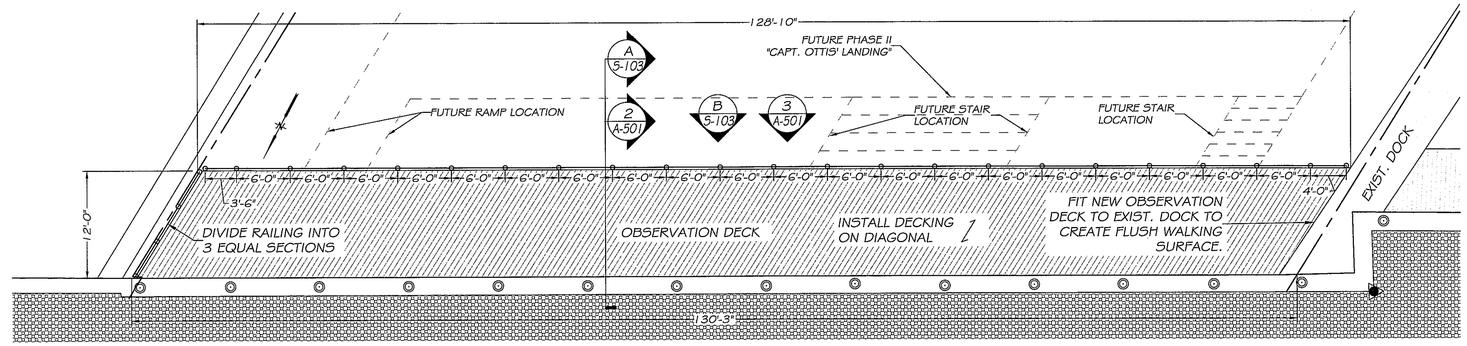

1 / A-501 OBSERVATION DECK PLAN
SCALE: 1/8" = 1'-0"

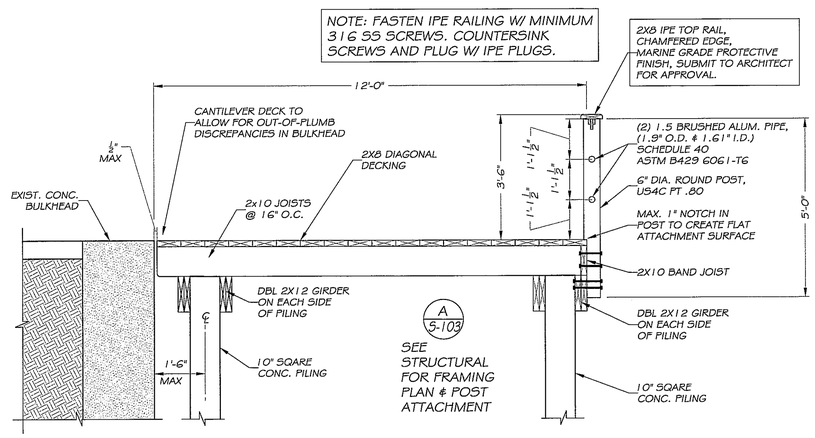

2 / A-501 OBSERVATION DECK SECTION
SCALE: 1/2"= 1'-0"

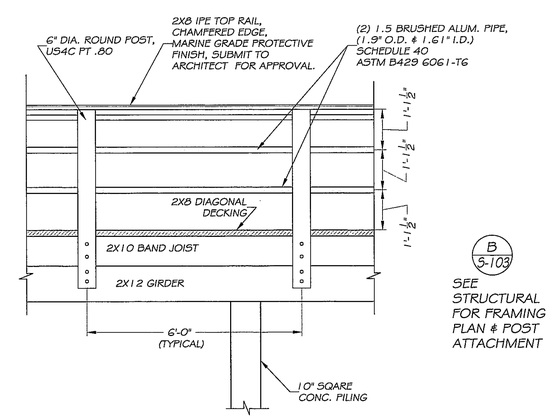

3 / A-501 OBSERVATION DECK ELEVATION
SCALE: 1/2"= 1'-0"

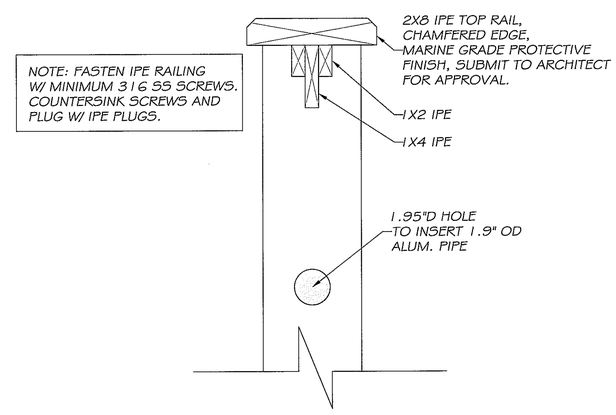

4 / A-501 RAIL DETAIL-SECTION
SCALE: 3"= 1'-0"

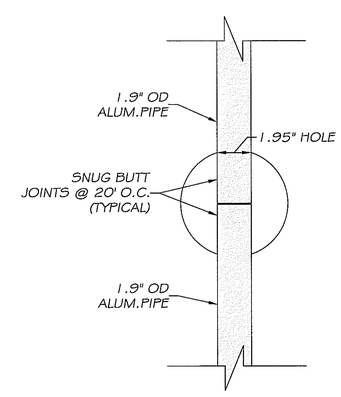

5 / A-501 RAIL DETAIL- PLAN
SCALE: 3"= 1'-0"

MK CHALK ARCHITECTURE, PA
P.O. Box 622
Morehead City, NC 28557

CONSULTANTS:

BURNETTE ARCHITECTURE & PLANNING
ASSOCIATE ARCHITECT

MEP ENGINEERING
STROUD ENGINEERING
L. MICHAEL STROUD, P.E.
GREENVILLE, NC &
MOREHEAD CITY, NC

ENGINEERING CONSULTANT
W.F. PARKER, P.E.
CAPE CARTARET, NC

MARINE STRUCTURAL & STRUCTURAL ENGINEERING
ANDREW CONSULTING ENGINEERS
JOHN "ROD" ANDREW, P.E.
NEAL W. ANDREW, P.E.
WILMINGTON, NC

CIVIL ENGINEERING & SURVEYING
McDAVID ASSOCIATES
TYNDALL LEWIS, P.E.
GOLDSBORO, NC

SEAL:

MK CHALK ARCHITECTURE, PA — 52434 — MOREHEAD CITY, NC
MARGARET KELLUM CHALK — 11614 — MOREHEAD CITY, NC
KENNETH W. BURNETTE — 6092 — 17 June 2013 — MOREHEAD CITY, N.C.
STROUD ENGINEERING — CERT. NO. 50921 — MOREHEAD CITY, NC

REVISIONS:
17 JUNE 2013

"JIB" PROPERTY WATERFRONT AMENITY
Morehead City, NC 28557
PHASE I- OBSERVATION DECK

APPROVED BY OWNER DATE

APPROVED BY OWNER DATE

DATE: 04 JANUARY 2013
CHECK BY: MKC
DRAWN BY: LNS
SCALE: VARIES

OBSERVATION DECK & RAILING DETAILS

A-501